2022 Workshop
May 24-26th

P7 (P4 Programmable Patch Panel): an instant 100G emulated network testbed in a pizza box

Fabricio E Rodriguez Cesen (UNICAMP),
Marcos Felipe Schwarz (RNP),
Christian Esteve Rothenberg (UNICAMP)

RNP
REDE NACIONAL DE ENSINO E PESQUISA

INTRIG
INFORMATION & NETWORKING TECHNOLOGIES RESEARCH & INNOVATION GROUP

UNICAMP

Agenda

- P7 overview
- Link characteristics
- Generated files
- Demo
- Topology definition and generation
- Challenges
- Future of P7

P7

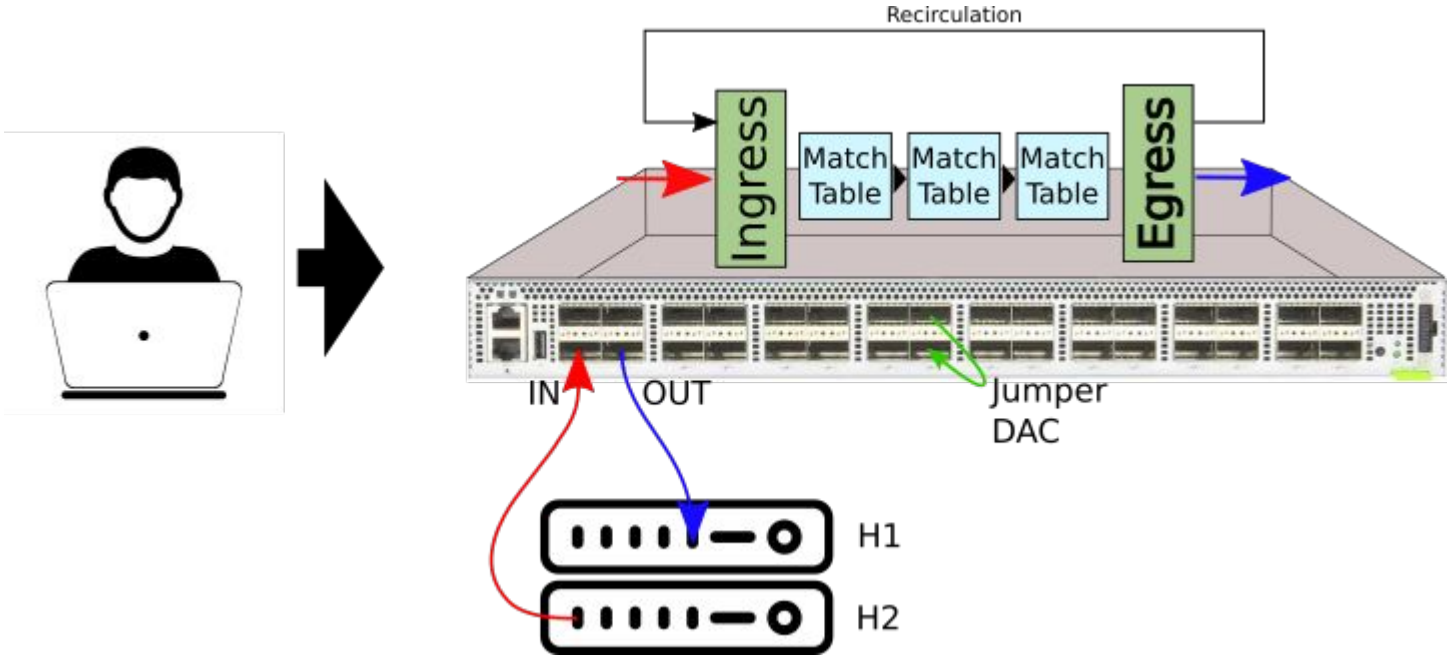
Recirculation
Ingress
Match Table
Match Table
Match Table
Egress
IN
OUT
Jumper DAC
H1
H2

Link characteristics and implementation approaches

Link Connectivity	Jumper cabling with/without internal Tag Intern Recirculation + internal Tag
Latency [ms]	Internal timer + recirculation TM + Pipelines recirculation
Jitter [ms]	Hash to determine recirculation times Lookup table with mathematical functions
Packet loss [%]	Random function to determine the probability to discard packets Realistic packet loss model
Re-ordering	TNA TM features Targeted probabilistic packet (ID) recirculation within a flow
Bandwidth	Rate limit TNA TM feature Port configuration and mapping

Network topology

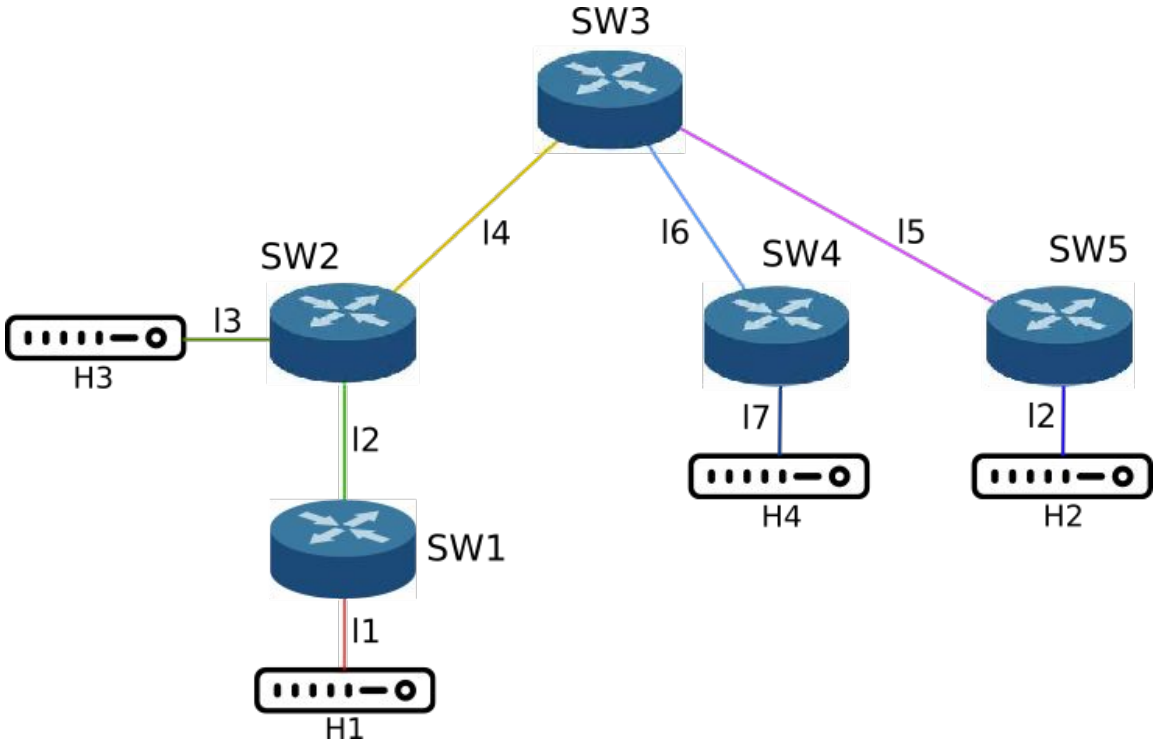

P7 topology

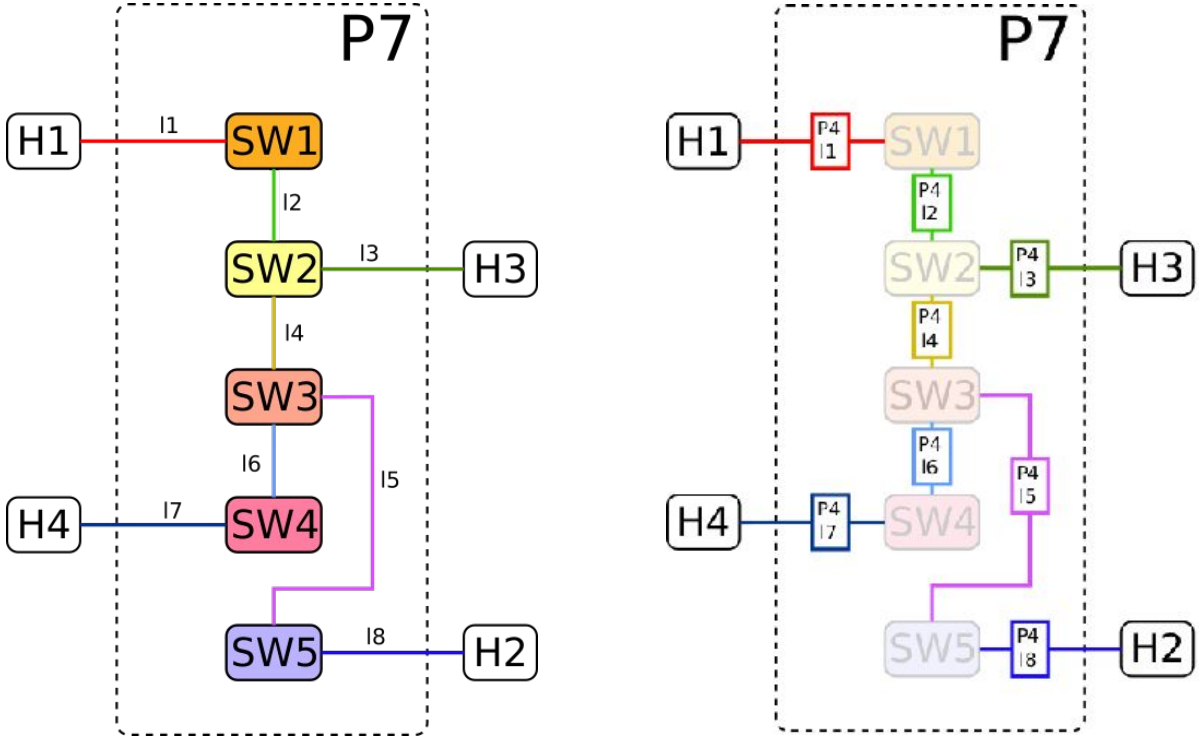
P7
H1
I1
SW1
I2
SW2
I3
H3
I4
SW3
I6
I5
H4
I7
SW4
SW5
I8
H2
P7
H1
P4 I1
SW1
P4 I2
SW2
P4 I3
H3
P4 I4
SW3
P4 I6
P4 I5
H4
P4 I7
SW4
SW5
P4 I8
H2

Generated files

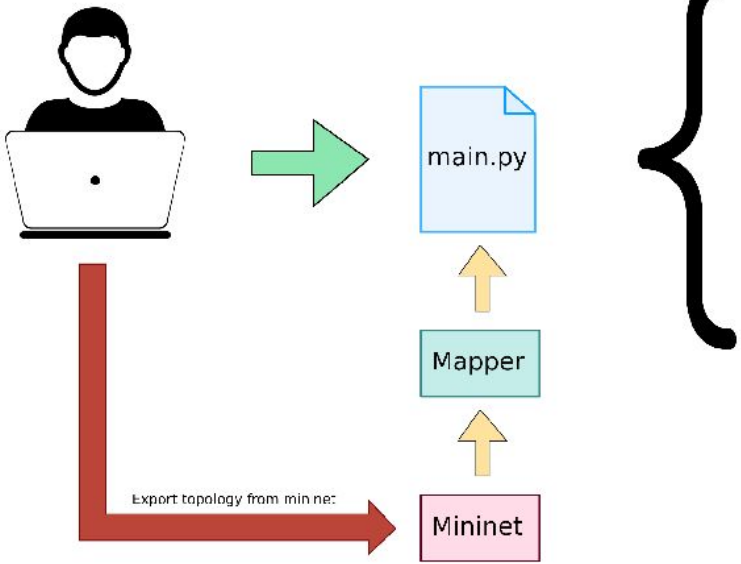

p7.p4 - P4 program

chassis_config.pb.txt - Interfaces configuration
- TM

p4rt.py - Tables information

? User needs to define the port distribution

DEMO

RNP
REDE NACIONAL DE ENSINO E PESQUISA

INTRIG
INFORMATION & NETWORKING TECHNOLOGIES RESEARCH & INNOVATION GROUP

UNICAMP

Link characteristics

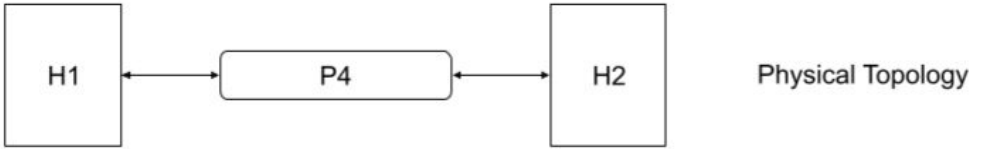

Physical Topology

Emulated Topology

Direct link

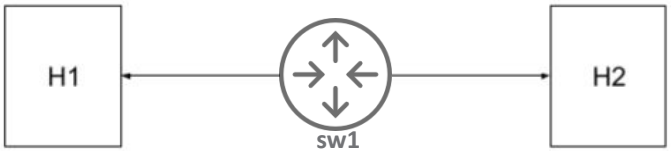

Emulated Topology

Device in the middle

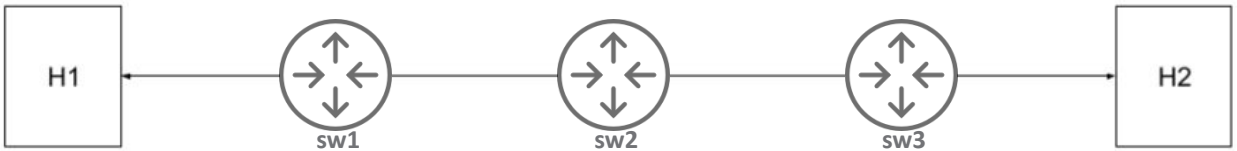

Emulated Topology

Various devices in the middle

Link characteristics

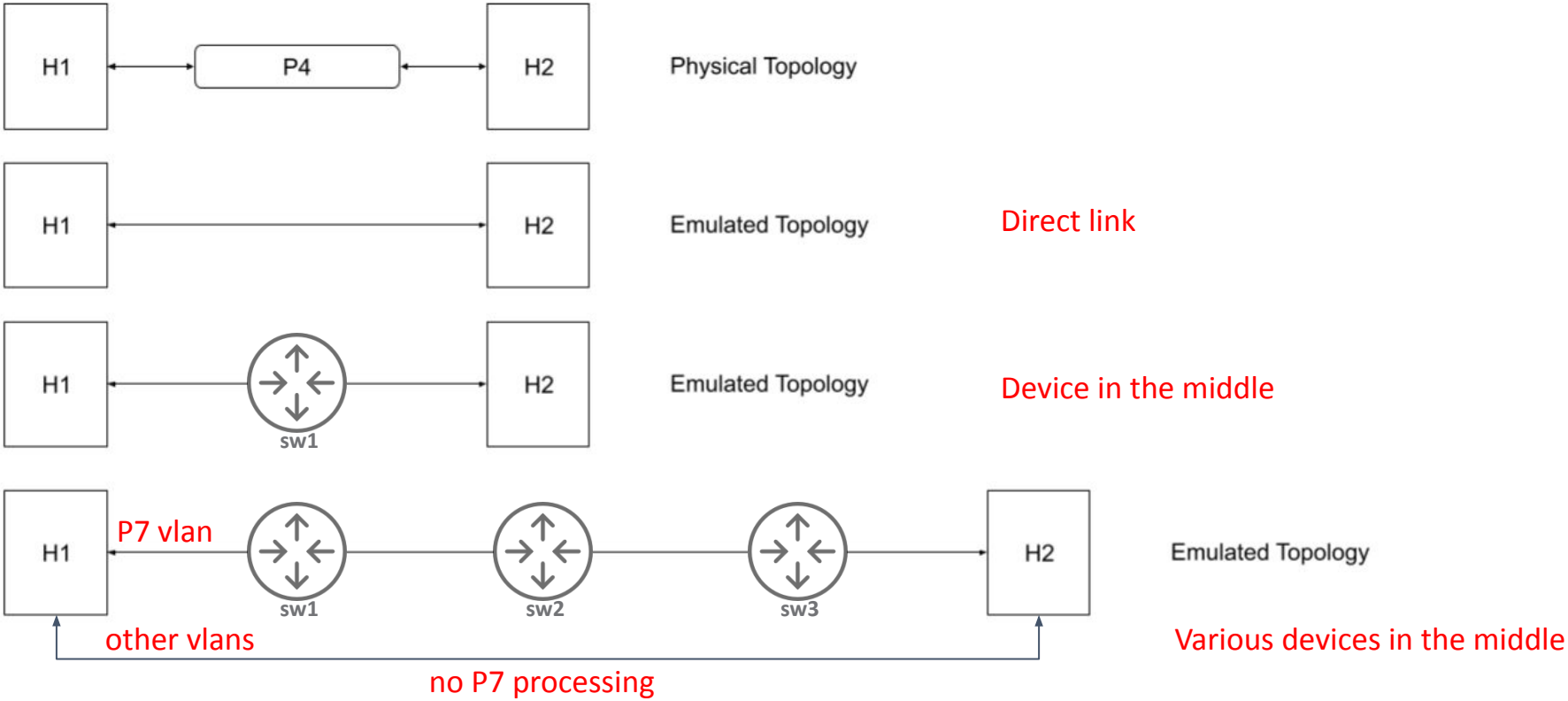

Direct link

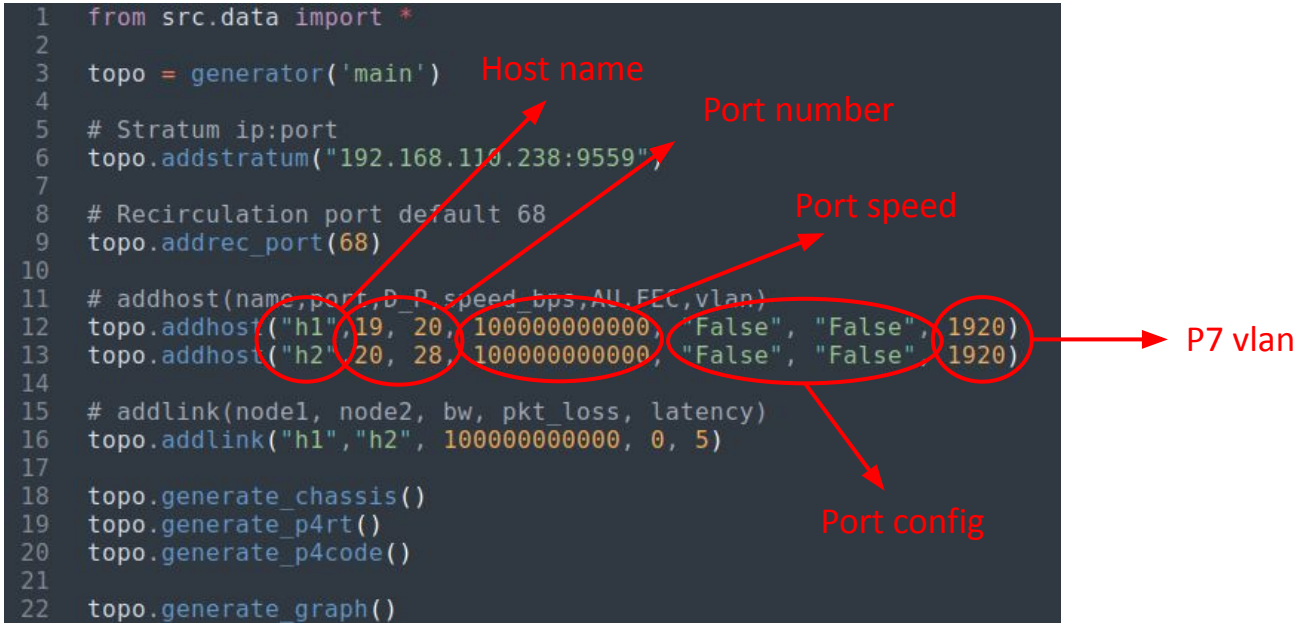
from src.data import *
topo = generator('main')
# Stratum ip:port
topo.addstratum("192.168.110.238:9559")
# Recirculation port default 68
topo.addrec_port(68)
# addhost(name,port,D_P_speed_bps,AU_FEC,vlan)
topo.addhost("h1", 19, 20, 100000000000, "False", "False", 1920)
topo.addhost("h2", 20, 28, 100000000000, "False", "False", 1920)
# addlink(node1, node2, bw, pkt_loss, latency)
topo.addlink("h1","h2", 100000000000, 0, 5)
topo.generate_chassis()
topo.generate_p4rt()
topo.generate_p4code()
topo.generate_graph()
Host name
Port number
Port speed
Port config
P7 vlan

Direct link

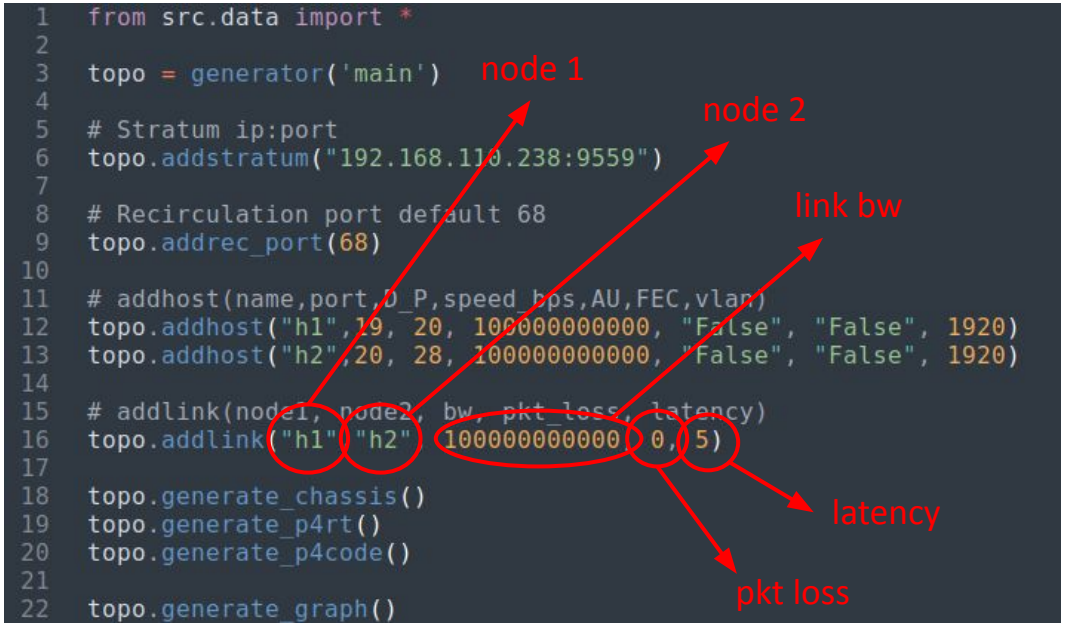
from src.data import *
topo = generator('main')
# Stratum ip:port
topo.addstratum("192.168.110.238:9559")
# Recirculation port default 68
topo.addrec_port(68)
# addhost(name,port,D_P,speed_bps,AU,FEC,vlan)
topo.addhost("h1",19, 20, 100000000000, "False", "False", 1920)
topo.addhost("h2",20, 28, 100000000000, "False", "False", 1920)
# addlink(node1, node2, bw, pkt_loss, latency)
topo.addlink("h1", "h2", 100000000000, 0, 5)
topo.generate_chassis()
topo.generate_p4rt()
topo.generate_p4code()
topo.generate_graph()
node 1
node 2
link bw
latency
pkt loss

Device in the middle

```
1  from src.data import *
2
3  topo = generator('main')
4
5  # Stratum ip:port
6  topo.addstratum("192.168.110.238:9559")
7
8  # Recirculation port default 68
9  topo.addrec_port(68)
10
11 # addswitch(name)
12 topo.addswitch("sw1")
13
14 # addhost(name,port,D_P,speed_bps,AU,FEC,vlan)
15 # include the link configuration
16 topo.addhost("h1",19, 20, 100000000000, "False", "False", 1920)
17 topo.addhost("h2",20, 28, 100000000000, "False", "False", 1920)
18
19 # addlink(node1, node2, bw, pkt_loss, latency)
20 topo.addlink("h1","sw1", 100000000000, 0, 5)
21 topo.addlink("sw1","h2", 100000000000, 0, 5)
22
23 topo.generate_chassis()
24 topo.generate_p4rt()
25 topo.generate_p4code()
26
27 topo.generate_graph()
```

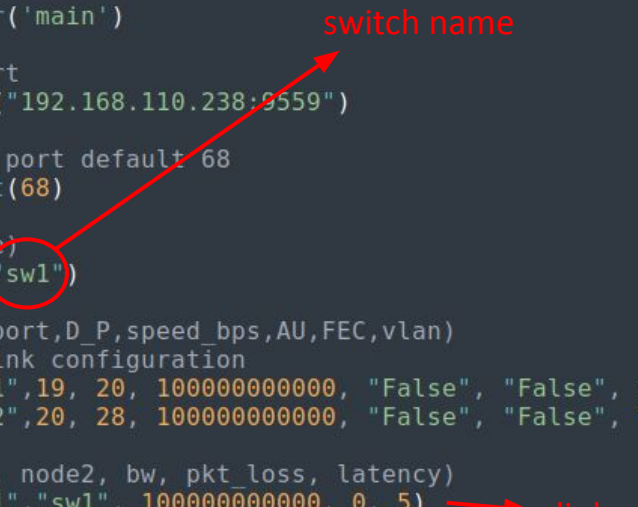

https://drive.google.com/file/d/1Hop_zgK-yIvP3MwUjHpMdhiqVVXNpiwY/view?usp=sharing

Future of P7

- Address open challenges
  - Topology Size
  - Buffers consumption
- New features
  - Packet generation for background/congestion traffic
  - In-band Network Telemetry (INT)
  - Dynamic link behaviors (e.g., pkt loss patterns)
  - Trace base link characteristics
- Open source repository and community
- Embed into disaggregated network testbed initiatives

P7 repository

Available soon at:

https://github.com/intrig-unicamp/p7

References / Related Work

- Mininet http://mininet.org/
- TurboNet: Faithfully Emulating Networks with Programmable Switches. Link Code
- CrystalNet: Faithfully Emulating Large Production Networks. Link
- BNV: Enabling Scalable Network Experimentation through Bare-metal Network Virtualization. Link

Thank You

Fabricio Rodriguez
frodri@dca.fee.unicamp.br

https://intrig.dca.fee.unicamp.br

RNP
REDE NACIONAL DE ENSINO E PESQUISA

INTRIG
INFORMATION & NETWORKING TECHNOLOGIES RESEARCH & INNOVATION GROUP

UNICAMP